SPAL AUTOMOTIVE

ELETTROVENTILATORI ASSIALI
AXIAL MOTOR FANS

12V. C.C. - *D.C.*

Code	Type	Fan Diameter
30102044	**VA13-AP70/LL-63A Fan (13" HP Curved Blade)**	**330 mm**

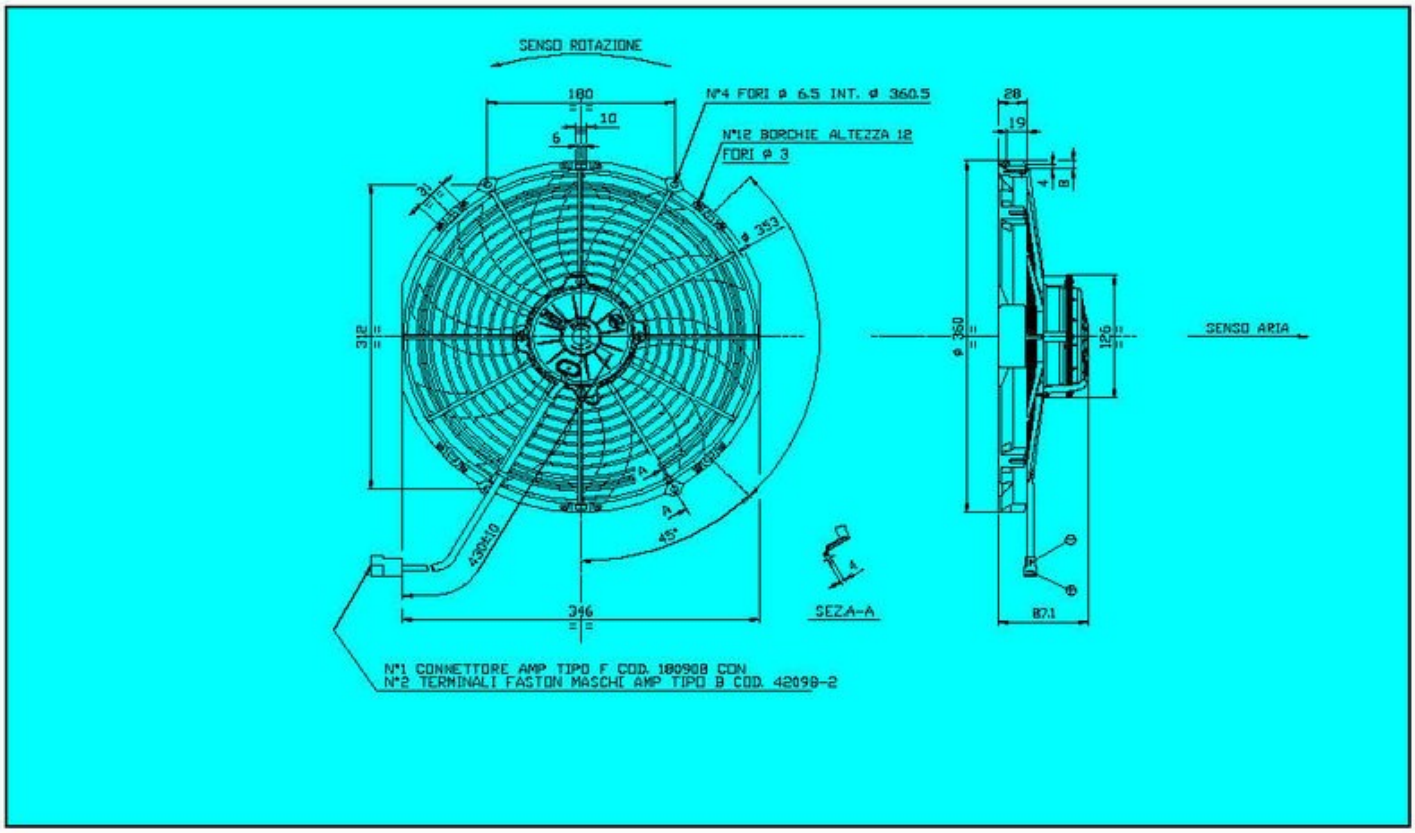

Approximate Weight is 5.25lbs.

Waterproof motor (IP68)

Long Life Motor

AMP Connector 180908
Connector Interface

Test Voltage @ 13VDC

Static Pressure Mm H_2O	Airflow m^3/h	Current Amps
0	3012	21.3
2.5	2797	21.6
5	2570	21.9
7.6	2303	22.2
10.1	2062	22
12.5	1724	20.8
15	1462	20.6
17.5	1272	21.2
20	1001	22.1
22.5	753	22.9
25	475	23.4
27.5	158	23.5
28.6	0	23.6